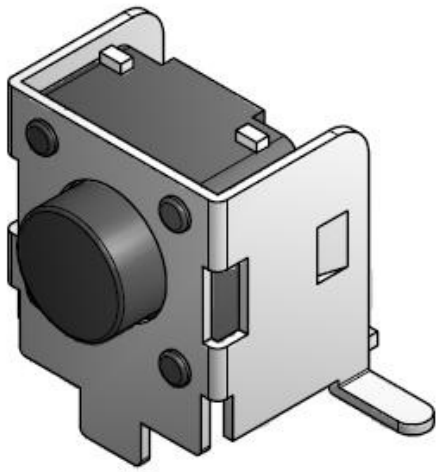

[1102U]

Typical Specifications

1. Rating : DC12V 50mA
2. Travel : 0.25±0.1mm
3. Contact Resistance : 100mΩMax.
4. Bounce : 10m SEC MAX.
5. Operating Force
   * 1102U-0 : 100±30gf [80,000Cycle]
   * 1102U-1 : 130±30gf [80,000Cycle]
   * 1102U-2 : 160±50gf [80,000Cycle]
   * 1102U-3 : 250±50gf [50,000Cycle]
   * 1102U-4 : 350±80gf [50,000Cycle]
   * 1102U-5 : 500±100gf [30,000Cycle]

OUTLINE DRAWING

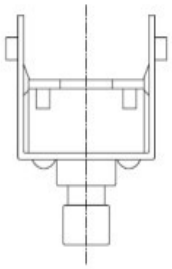

CIRCUIT DIAGRAM

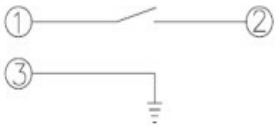

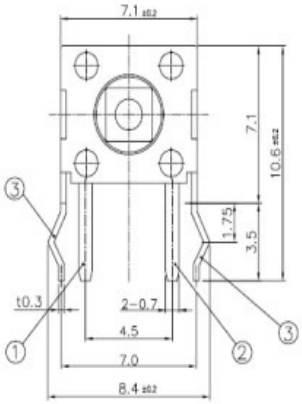

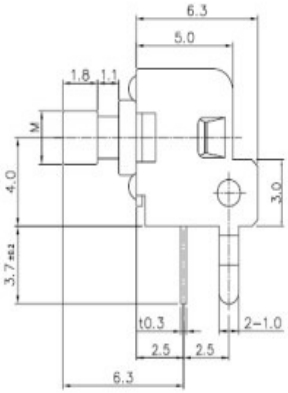
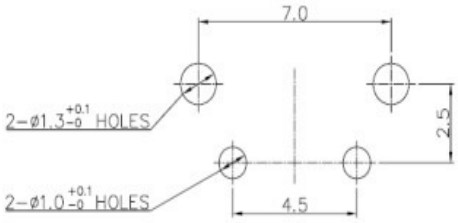
P.C.B MOUNTING HOLES